living b.p.c.
bonprix collection

936845

FSC
www.fsc.org
MIX
Wood from responsible sources
FSC® C109270

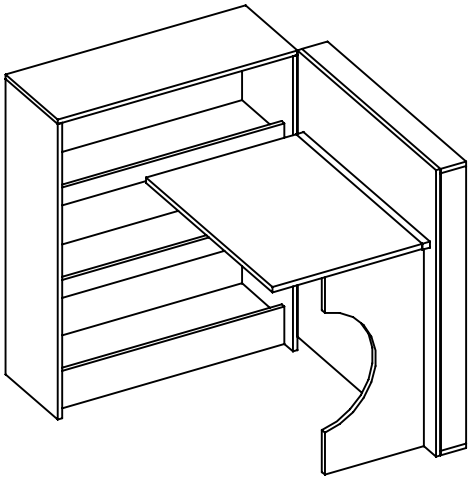

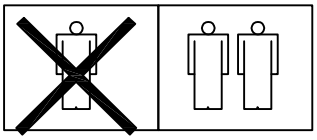

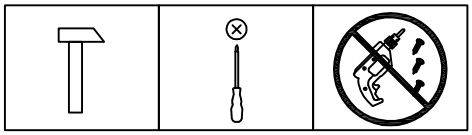

A X 1	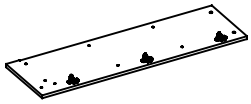 B X 1	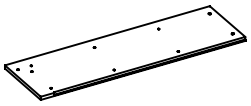 C X 1	D X 3
E X 2	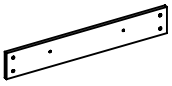 F X 1	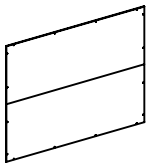 G X 1	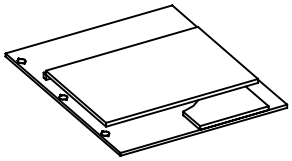 H X 1
J X 2	K X 2	M X 2	N X 3

a X 56	b X 56	c X 3	M4X15MM d X 16	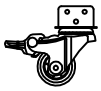 e X 1	f X 1	M3X12MM g X 16	M3X15MM h X 1	j X 1	k X 1

1

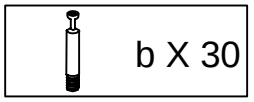

b X 30

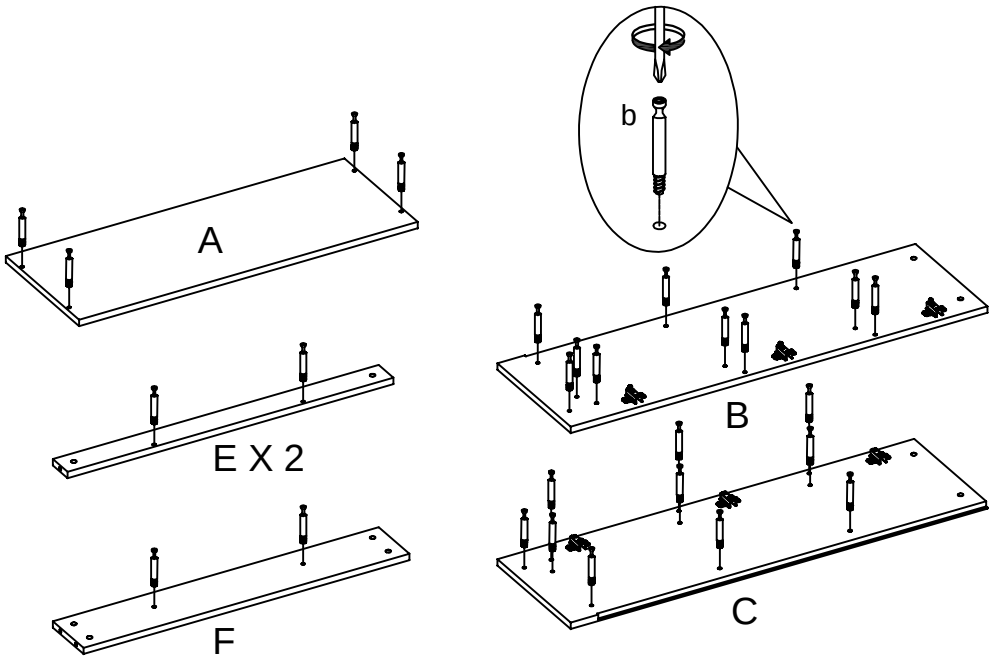

2

a X 6

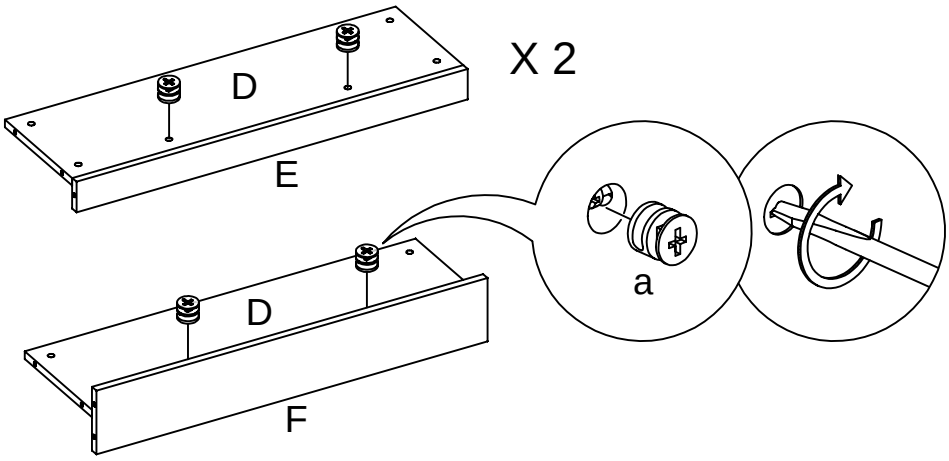

3

a X 20

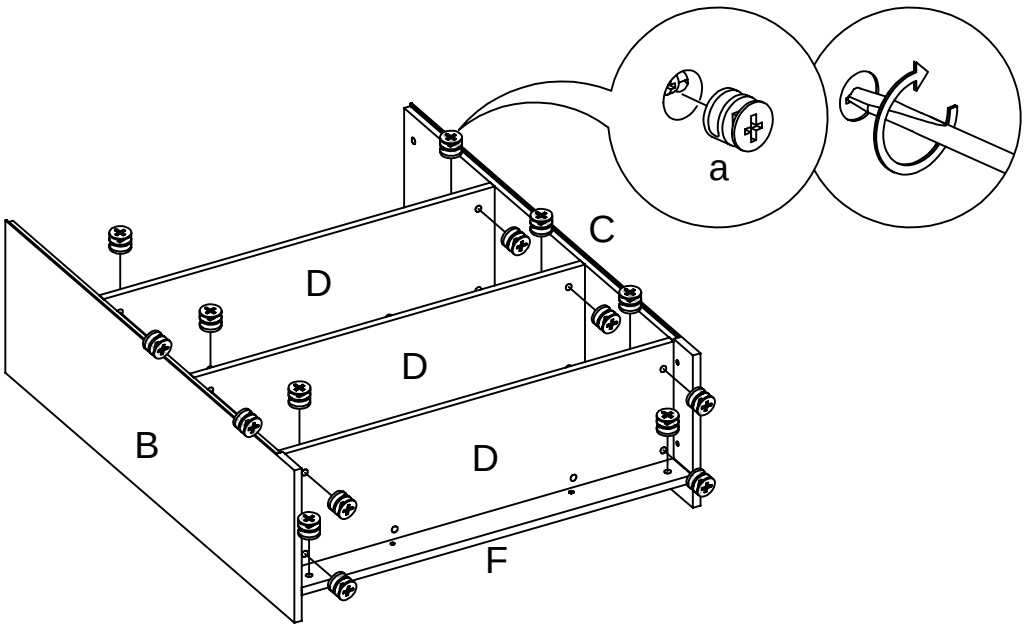

4

a X 4

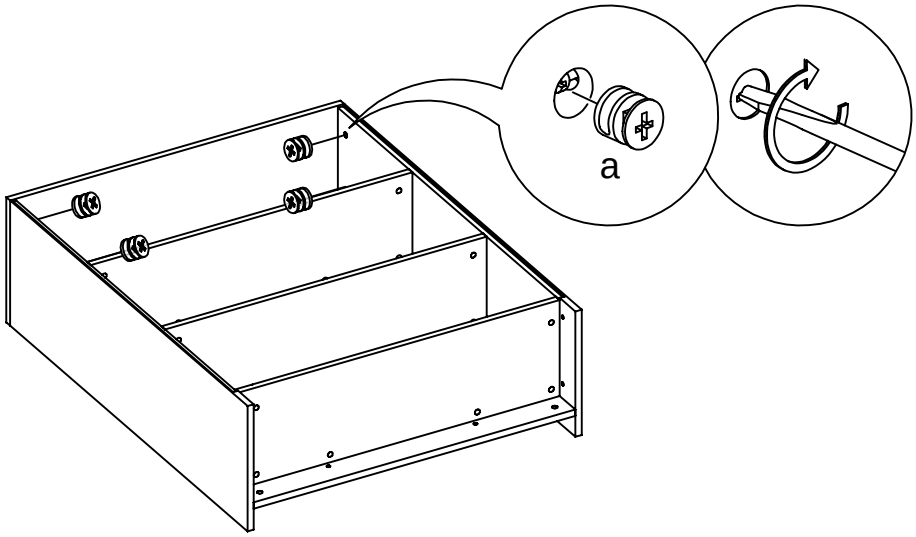

5

M3X12MM	g X 16
M3X15MM	h X 1
	j X 1
	k X 1

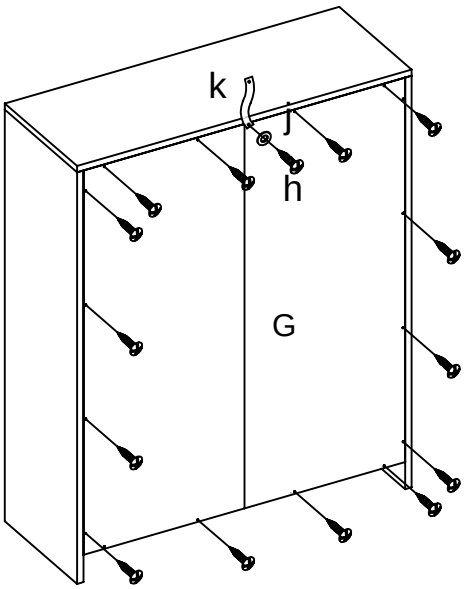

6

b X 26

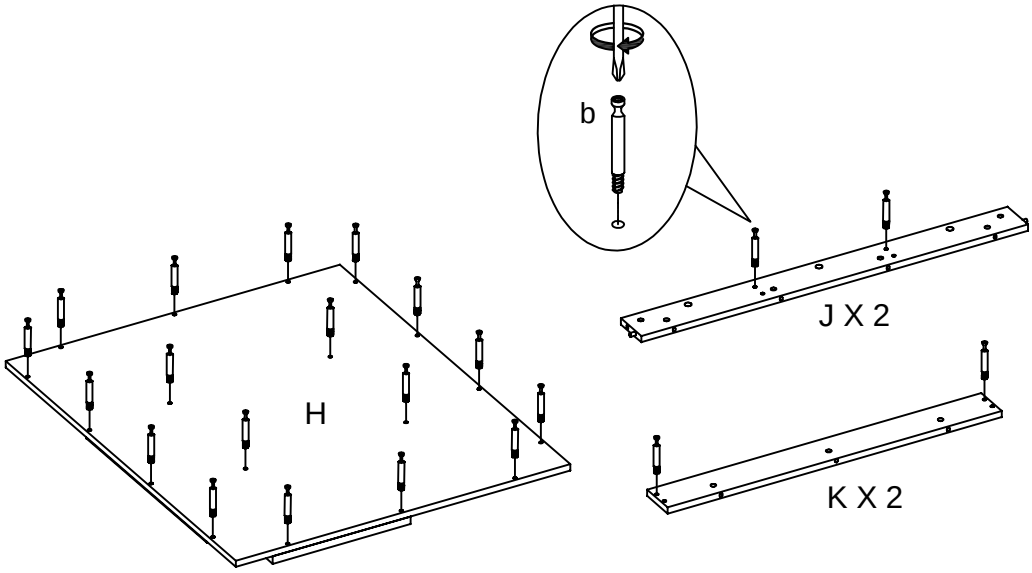

7

a X 4

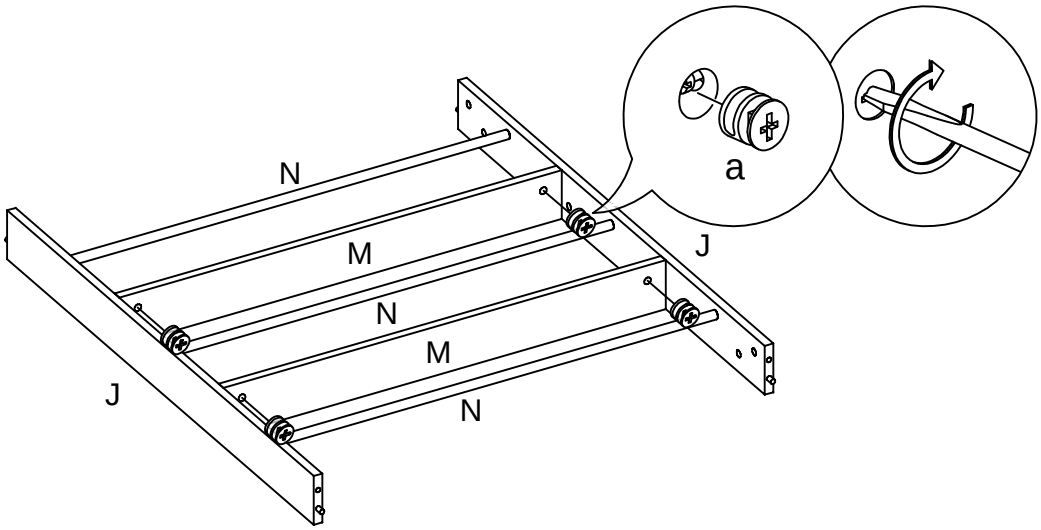

8

a X 4

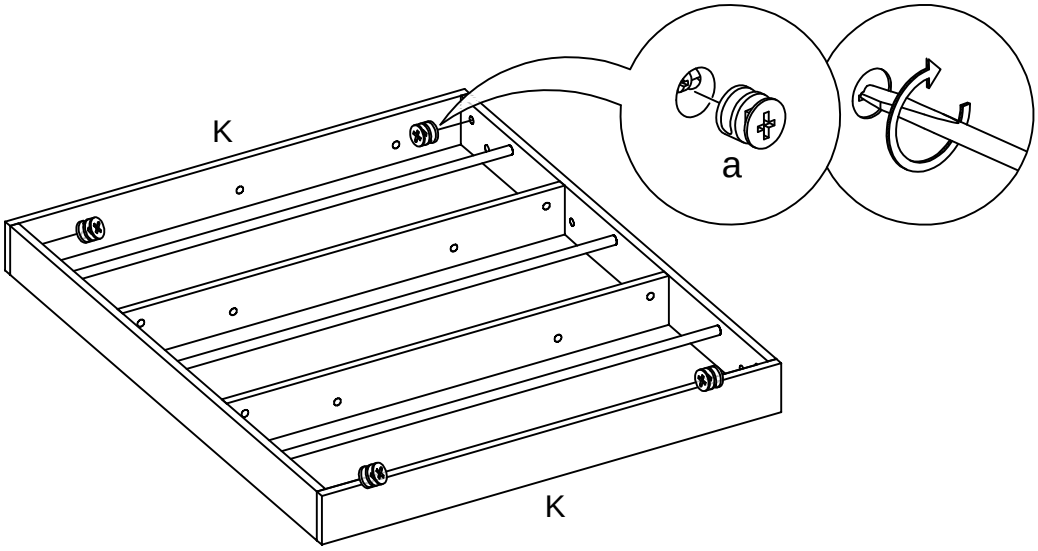

9

a X 18

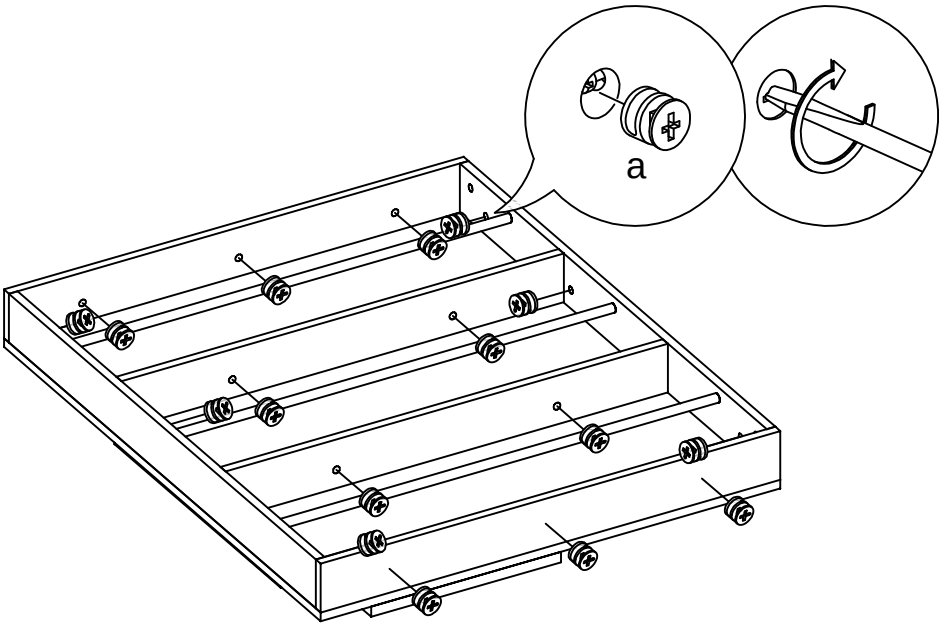

10

c X 3

M4X15MM

d X 6

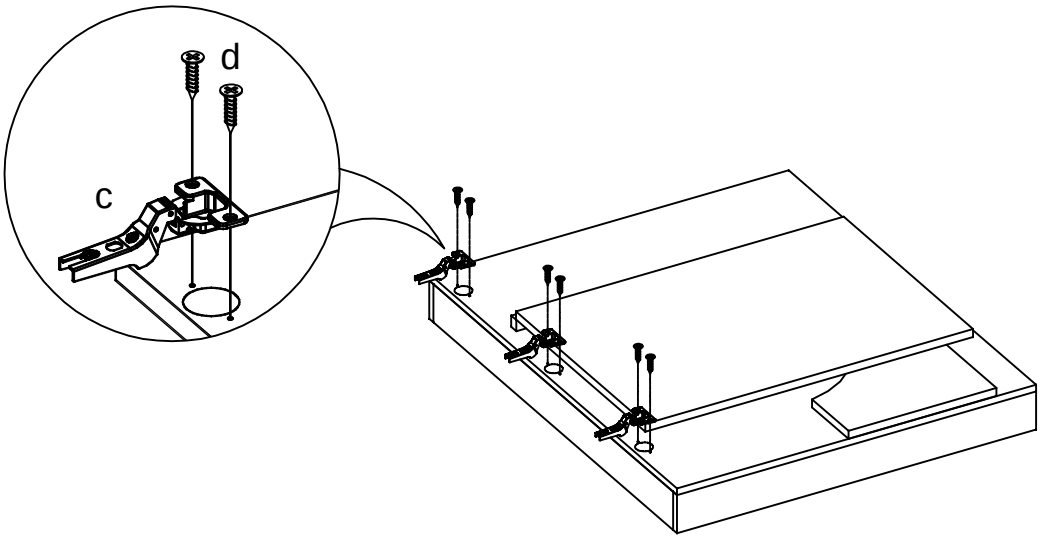

11

M4X15MM

d X 10

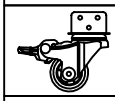
e X 1

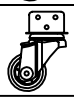
f X 1

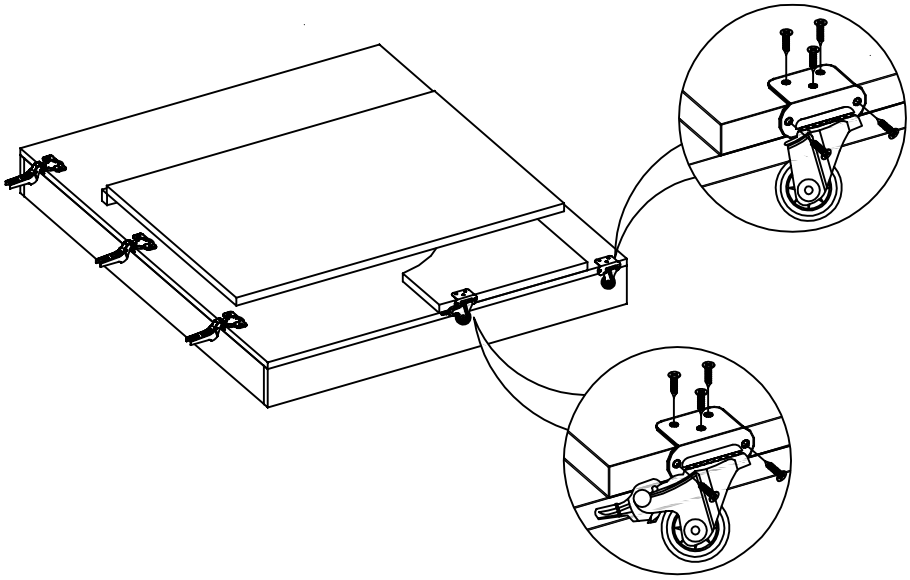

12

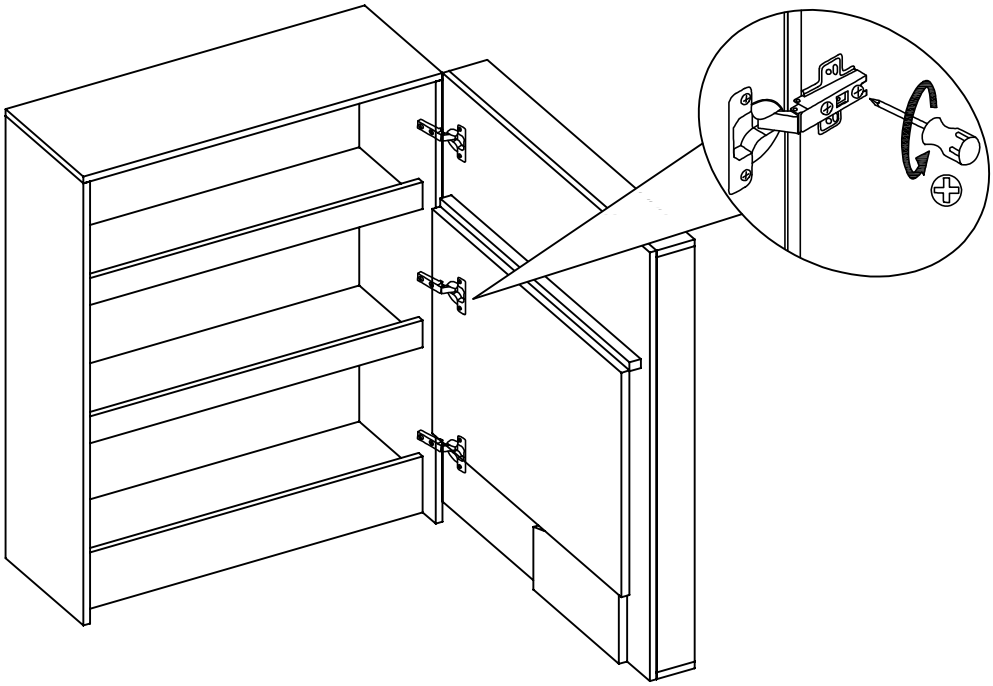

13

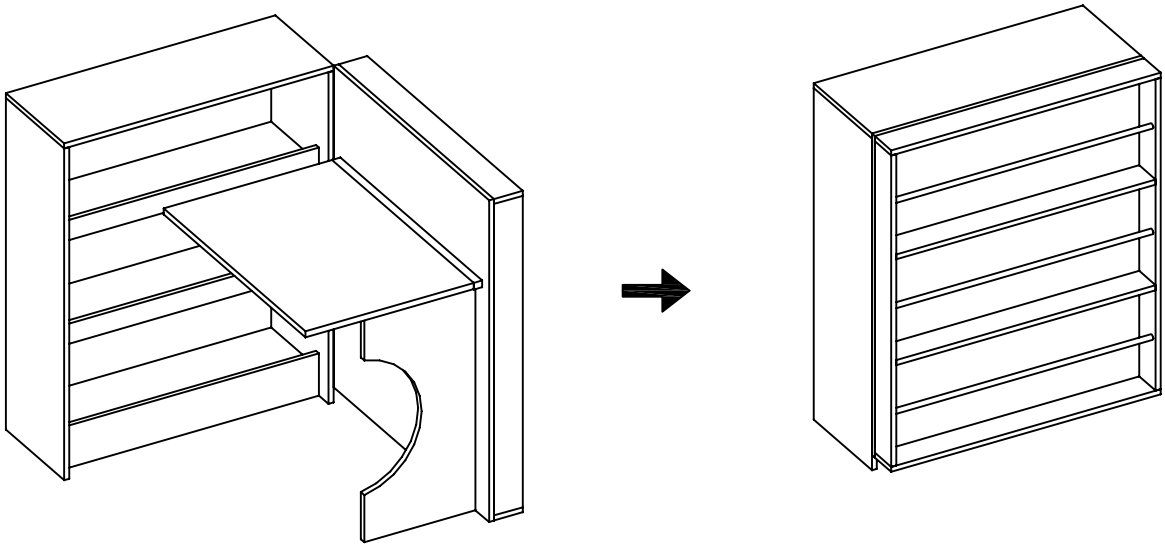

14
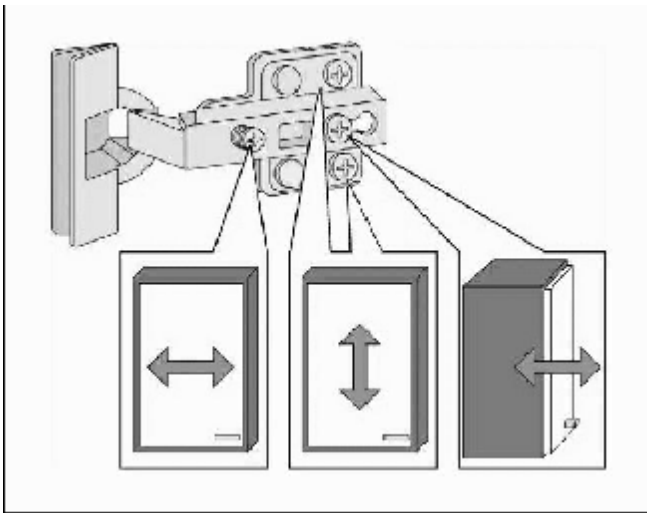
Türen einstellen (Scharniere justieren)
Adjusting the doors (adjusting the hinges)
Régler les portes (ajuster les charnières)
Sistemare le porte (regolare le cerniere)
Deuren instellen (scharnieren afstellen)
Nastawi drzwi (wyregulowa zawiasy)
Vyrovnejte dví ka (se i te záv sy)
Nastavenie dverí (nastavenie závesov)
állítsa be az ajtókat (állítsa be a zsanérokat)
Reglare u i (ajustare balamale)
Kapларn ayarlanmas (mente elerin seviye ayar)
Регулировка дверей (регулировка шарнира)