living b.p.c.

bonprix collection

909308

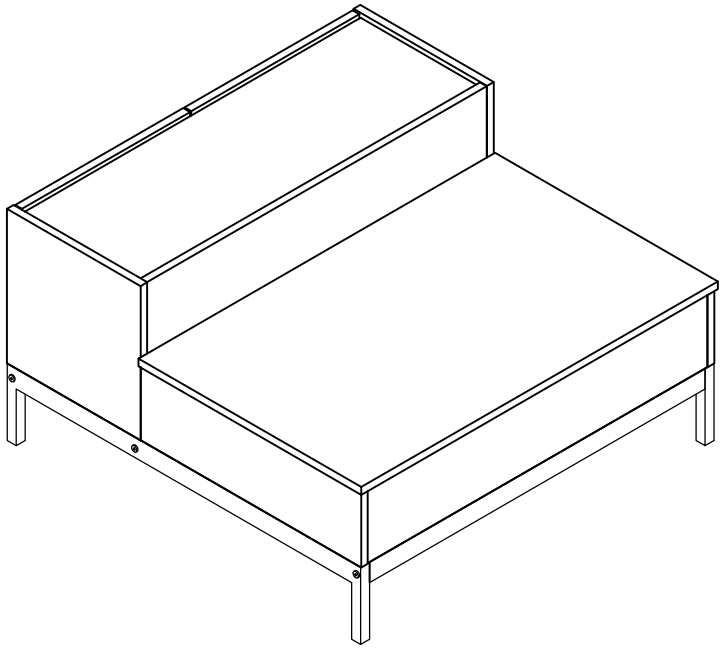

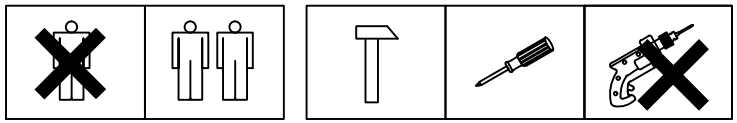

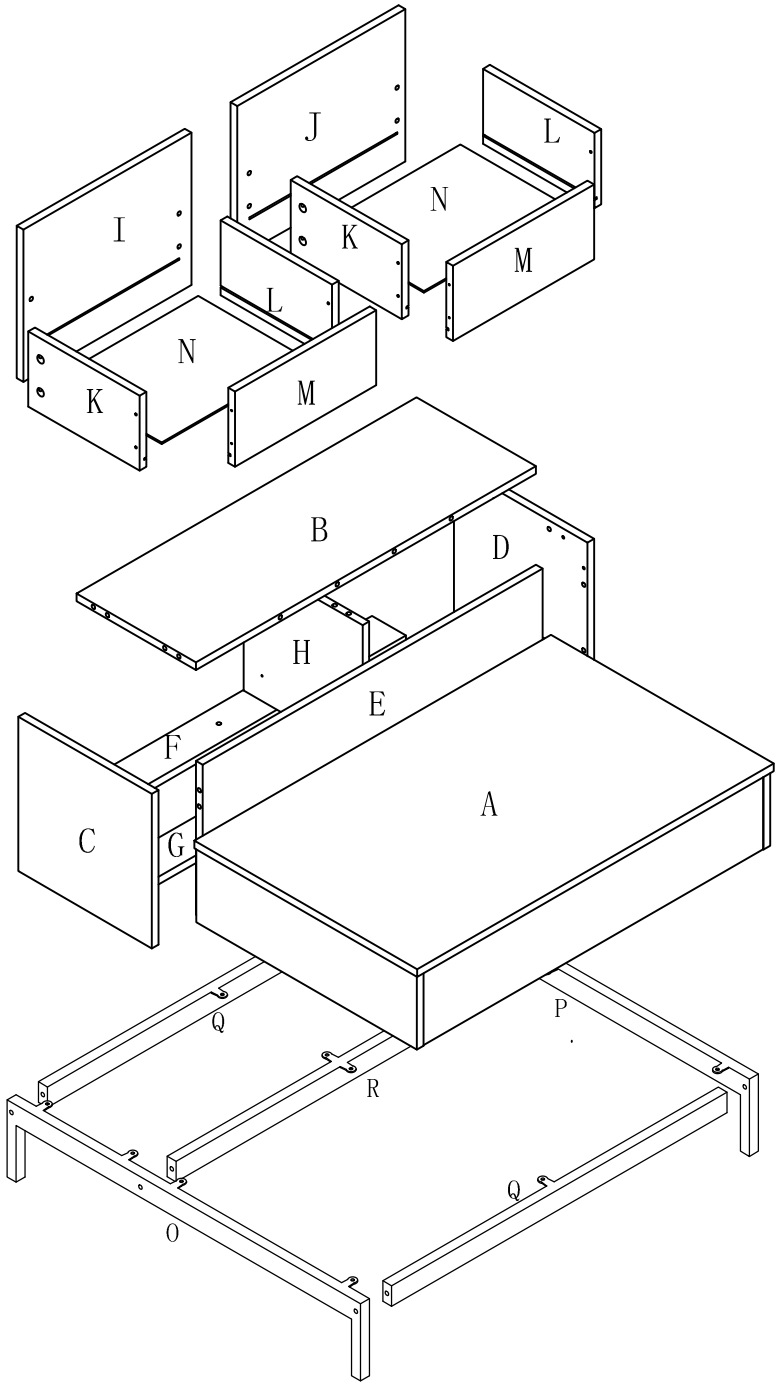

FSC
www.fsc.org
100%
Wood from well-managed forests
FSC® C111196

A	x	1
B	x	1
C	x	1
D	x	1
E	x	1
F	x	1
G	x	1
H	x	1
I	x	1
J	x	1
K	x	2
L	x	2
M	x	2
N	x	2
O	x	1
P	x	1
Q	x	2
R	x	1

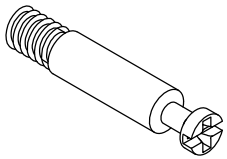	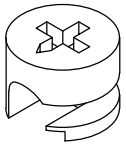	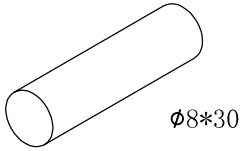	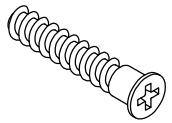	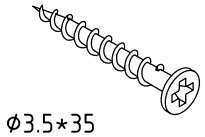	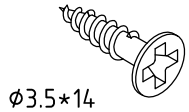
a x 30	b x 30	c x 14	d x 2	e x 8	f x 28
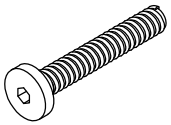	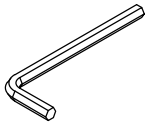	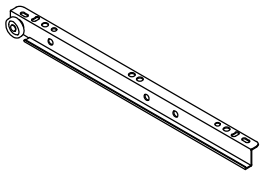	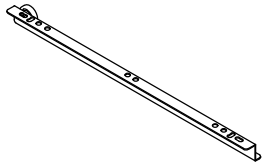	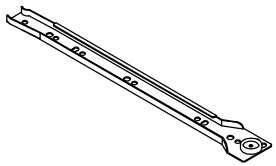	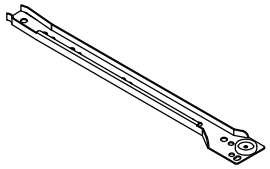
g x 6	h x 1	i x 2	j x 2	k x 2	l x 2

a x 22	c x 12	f x 4	l x 1	k x 1

1

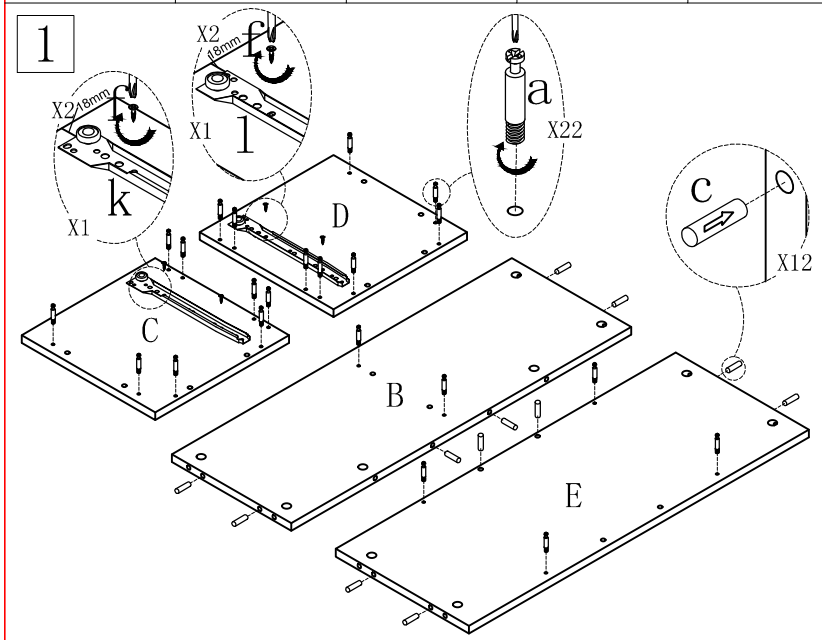

c x 2	f x 4	l x 1	k x 1

2

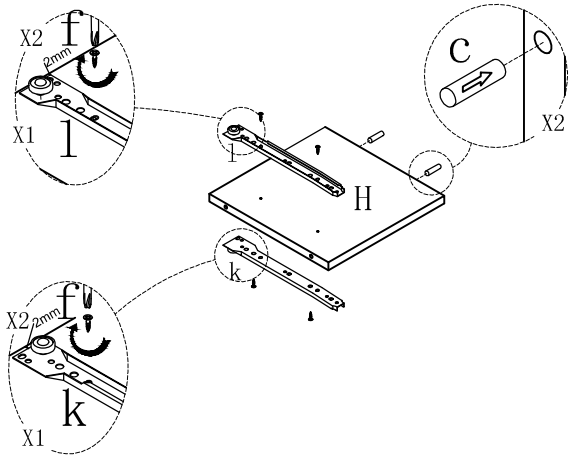

b x 4

3

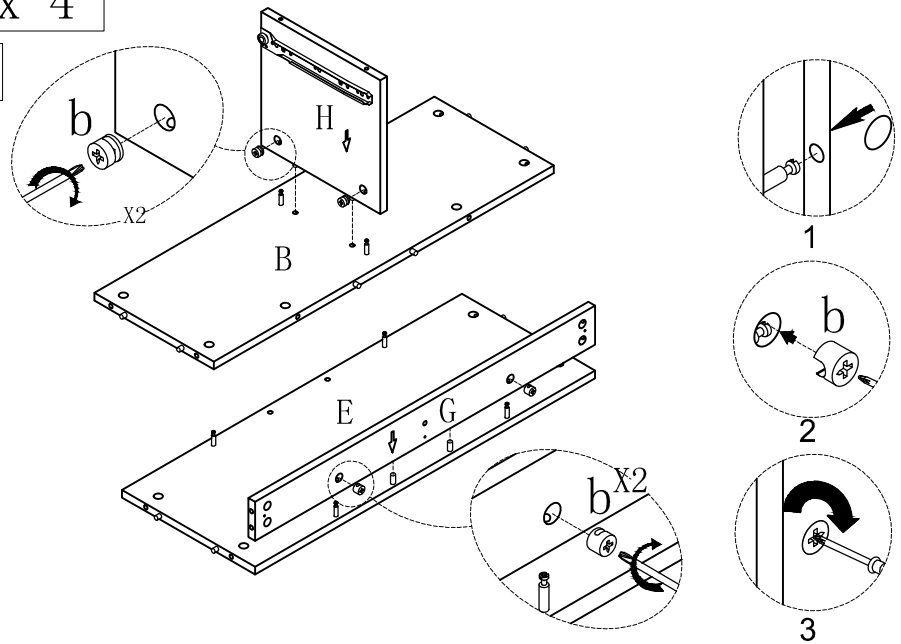

b x 2

4

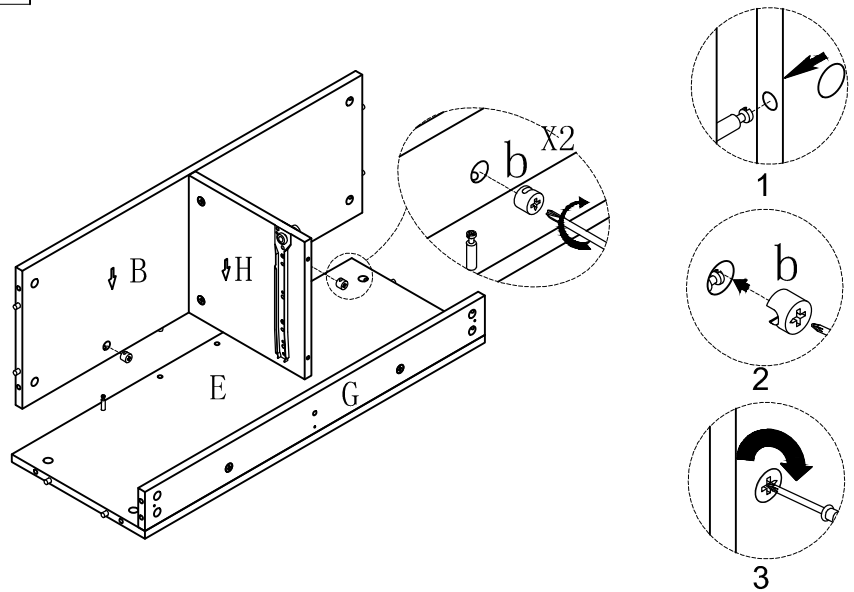

d x 1

5

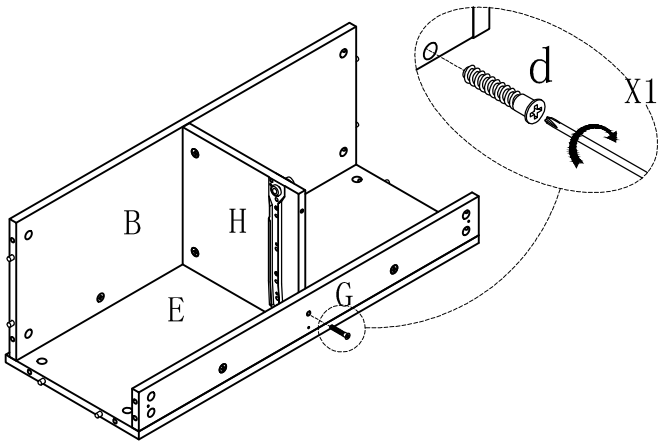

b x 16

7

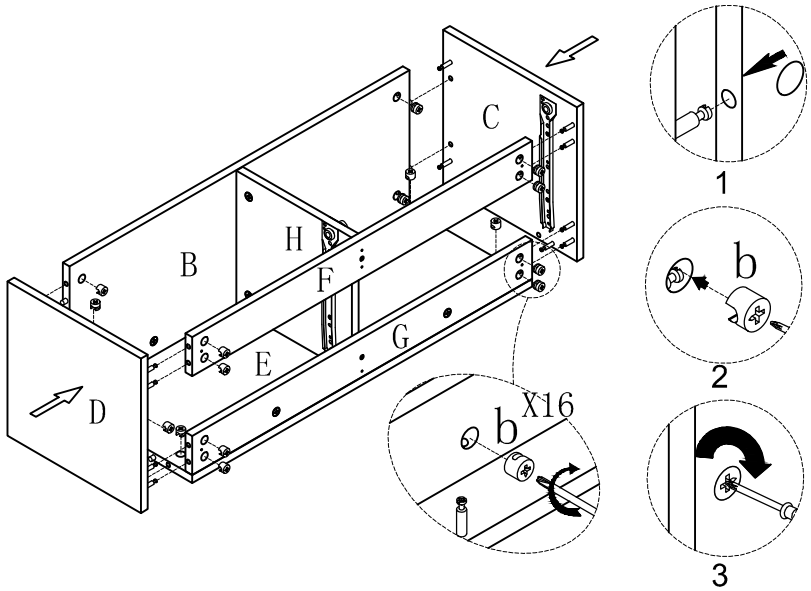

d x 1

6

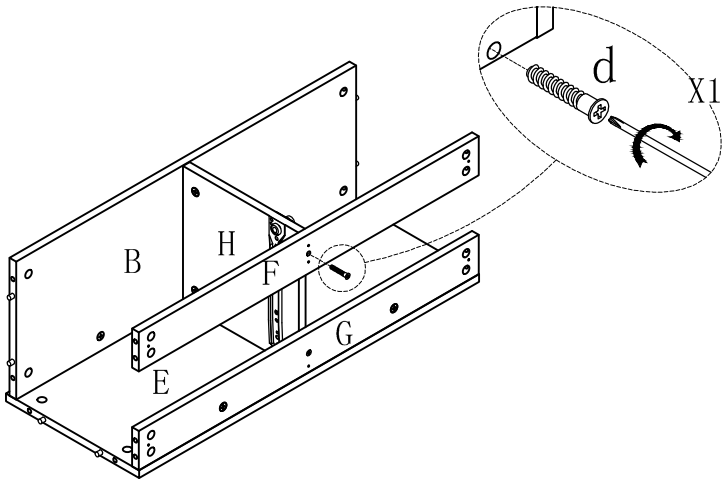

a x 8 | b x 8

8

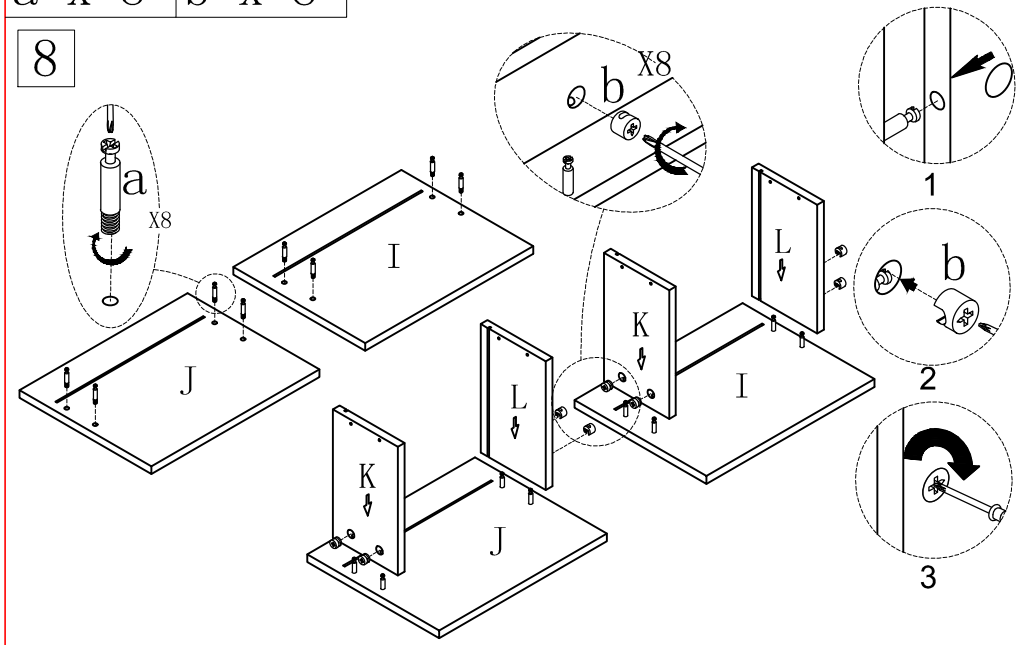

e x 8

9

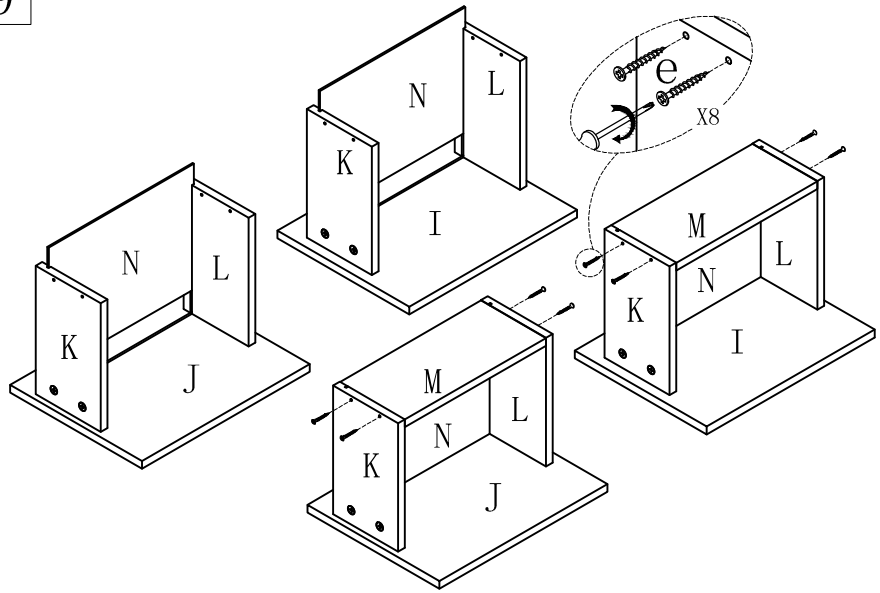

f x 8	i x 2	j x 2

10

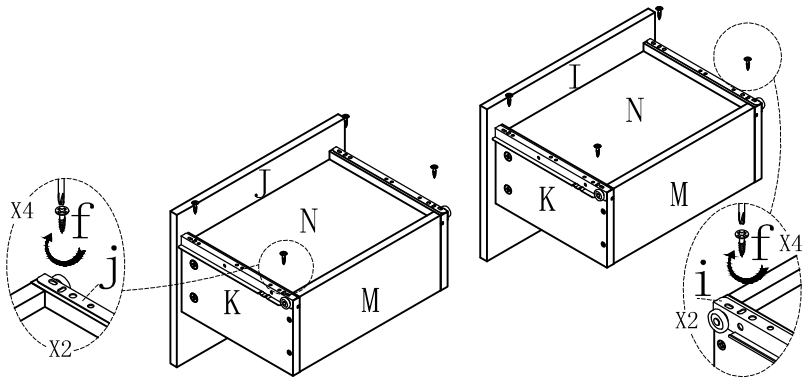

11

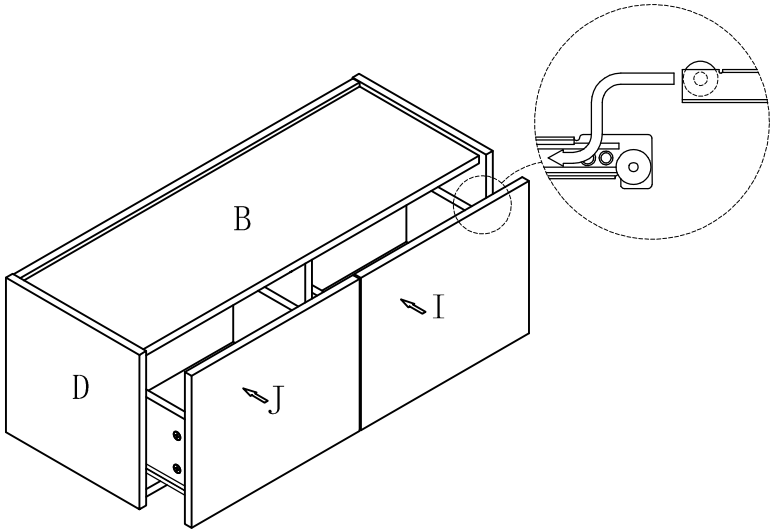

g x 6	h x 1

12

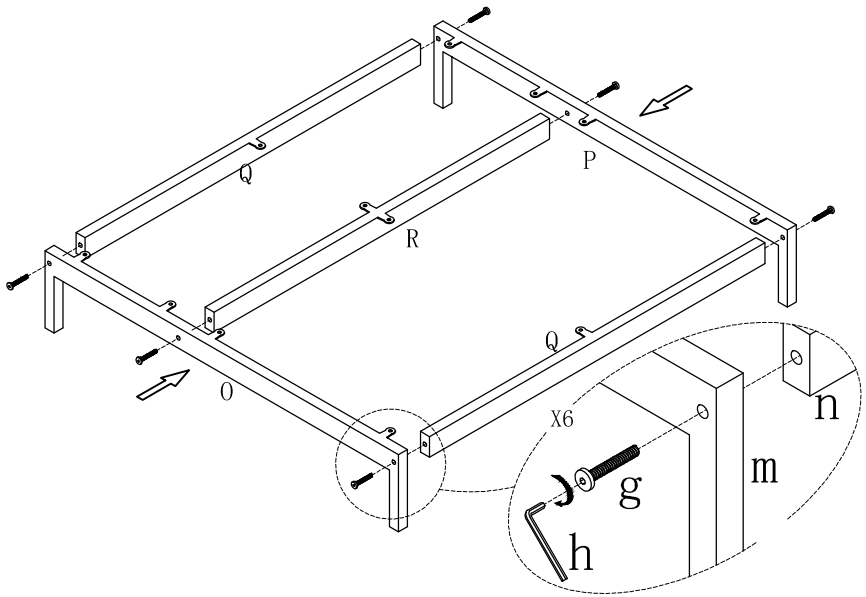

f x 6

13

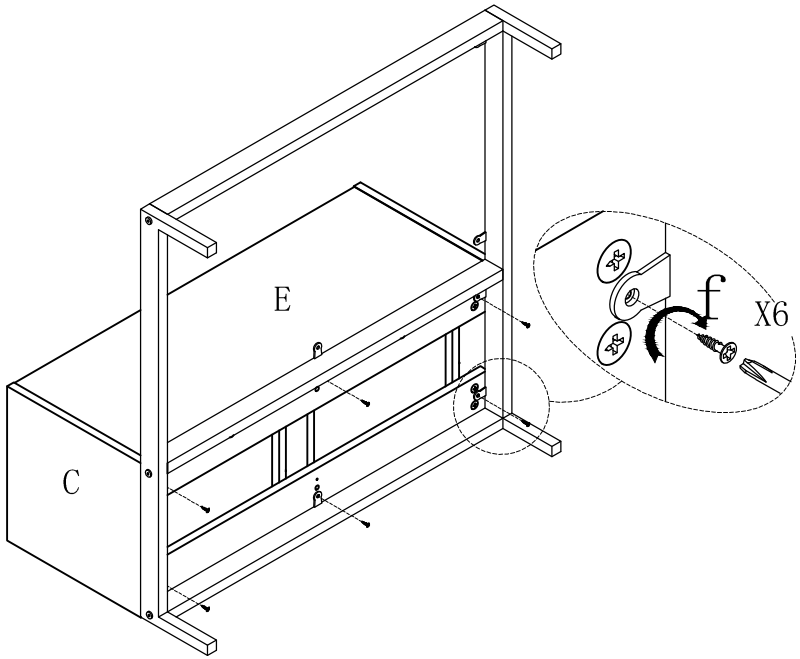

f x 6

14

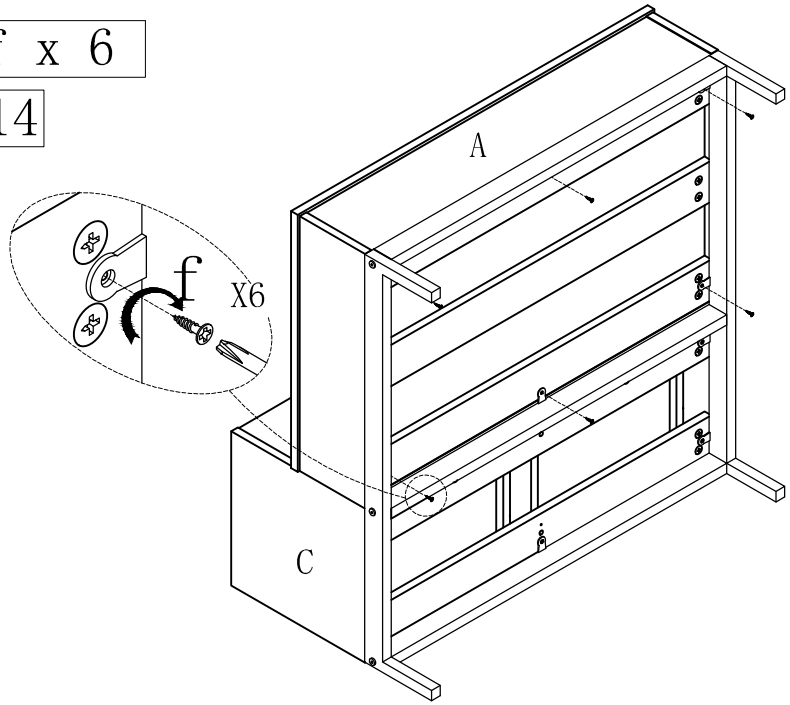

15

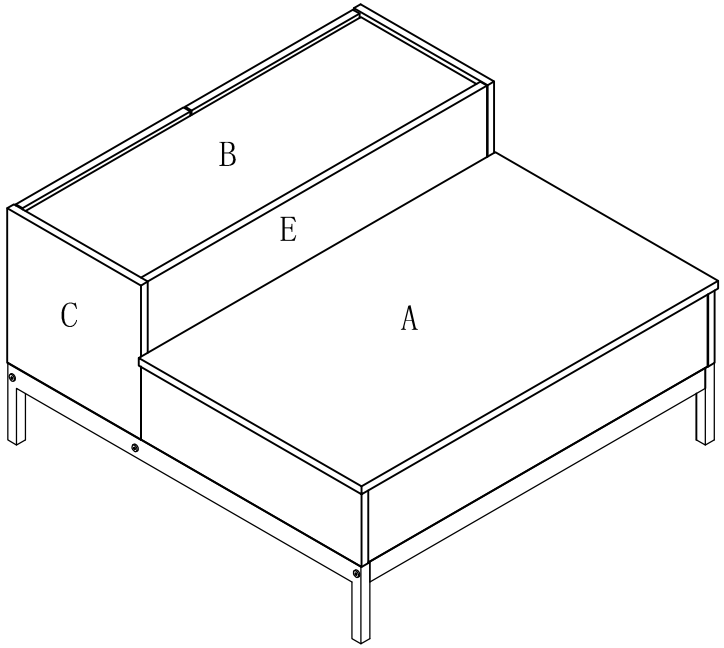
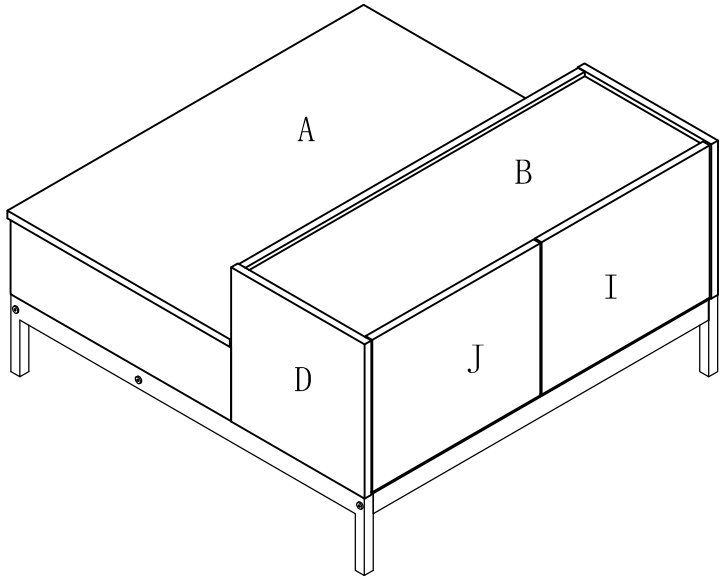
16